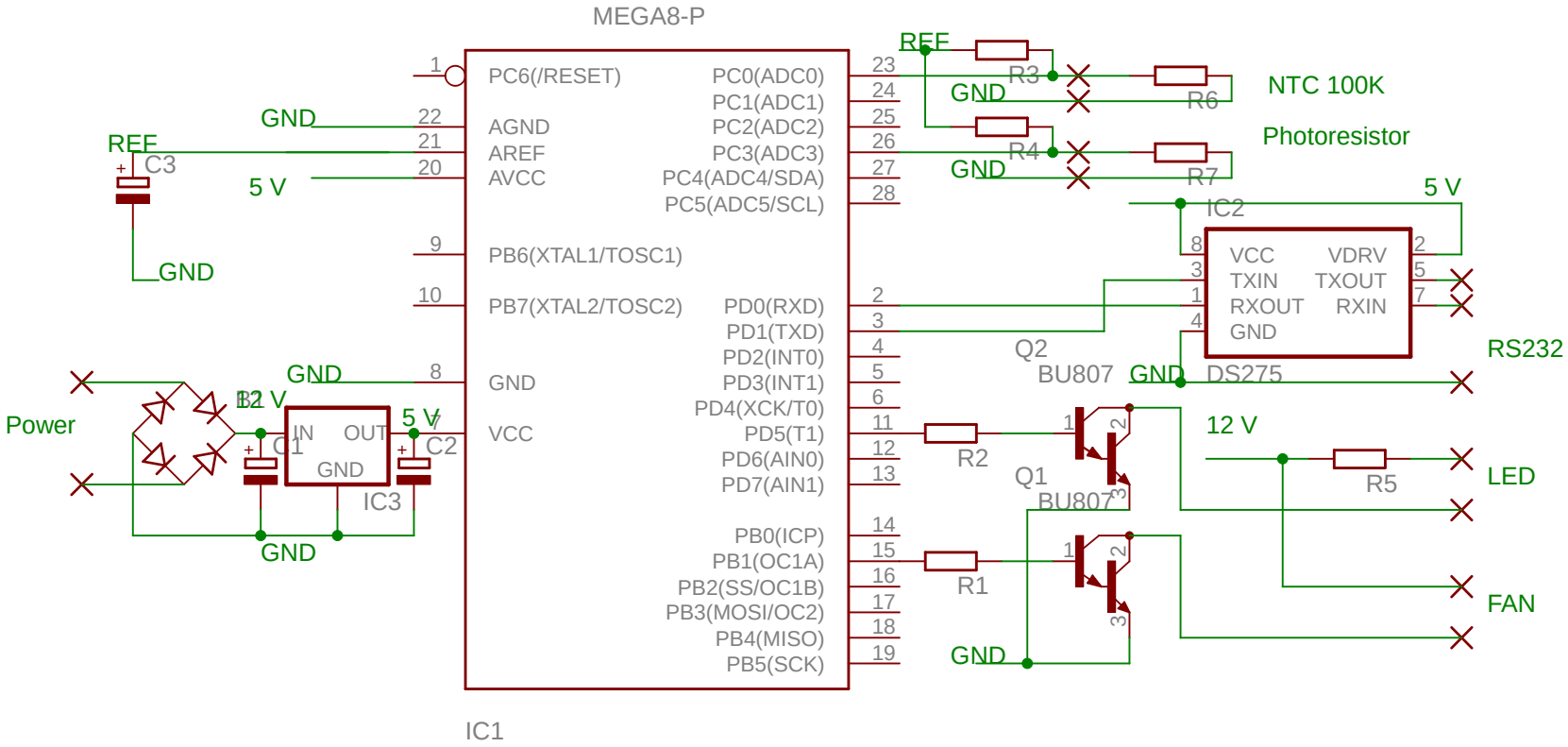
MEGA8-P
PC6(/RESET)
AGND
AREF
AVCC
PB6(XTAL1/TOSC1)
PB7(XTAL2/TOSC2)
GND
VCC
PC0(ADC0)
PC1(ADC1)
PC2(ADC2)
PC3(ADC3)
PC4(ADC4/SDA)
PC5(ADC5/SCL)
PD0(RXD)
PD1(TXD)
PD2(INT0)
PD3(INT1)
PD4(XCK/T0)
PD5(T1)
PD6(AIN0)
PD7(AIN1)
PB0(ICP)
PB1(OC1A)
PB2(SS/OC1B)
PB3(MOSI/OC2)
PB4(MISO)
PB5(SCK)
IC1
REF
GND
5 V
C3
Power
12 V
C1
IN
OUT
GND
IC3
C2
R3
R4
R6
R7
NTC 100K
Photoresistor
IC2
VCC
TXIN
RXOUT
GND
VDRV
TXOUT
RXIN
DS275
RS232
Q2
BU807
R2
Q1
BU807
R1
R5
LED
FAN